Docusign Envelope ID: 95E65C92-765E-82E0-8380-FC777F64954A

09/08/99

CONTRACT: DM00531 BRIDGE PROJECT: 18313.1011276.PR

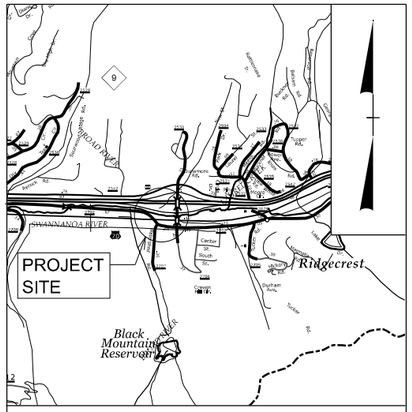

VICINITY MAP (NTS)

STATE OF NORTH CAROLINA
DIVISION OF HIGHWAYS

BUNCOMBE COUNTY

STATE	STATE PROJECT REFERENCE NO.	SHEET NO.	TOTAL SHEETS
N.C.	18313.1011276.PR		
STATE PROJ. NO.	F. A. PROJ. NO.	DESCRIPTION	
18313.1011276.PR	N/A	CONSTRUCTION	

LOCATION: *CULVERT ON DUNSMORE AVE. CARRYING SWANNANOA RIVER*

TYPE OF WORK: *GRADING, DRAINAGE, AND STRUCTURE REPAIRS*

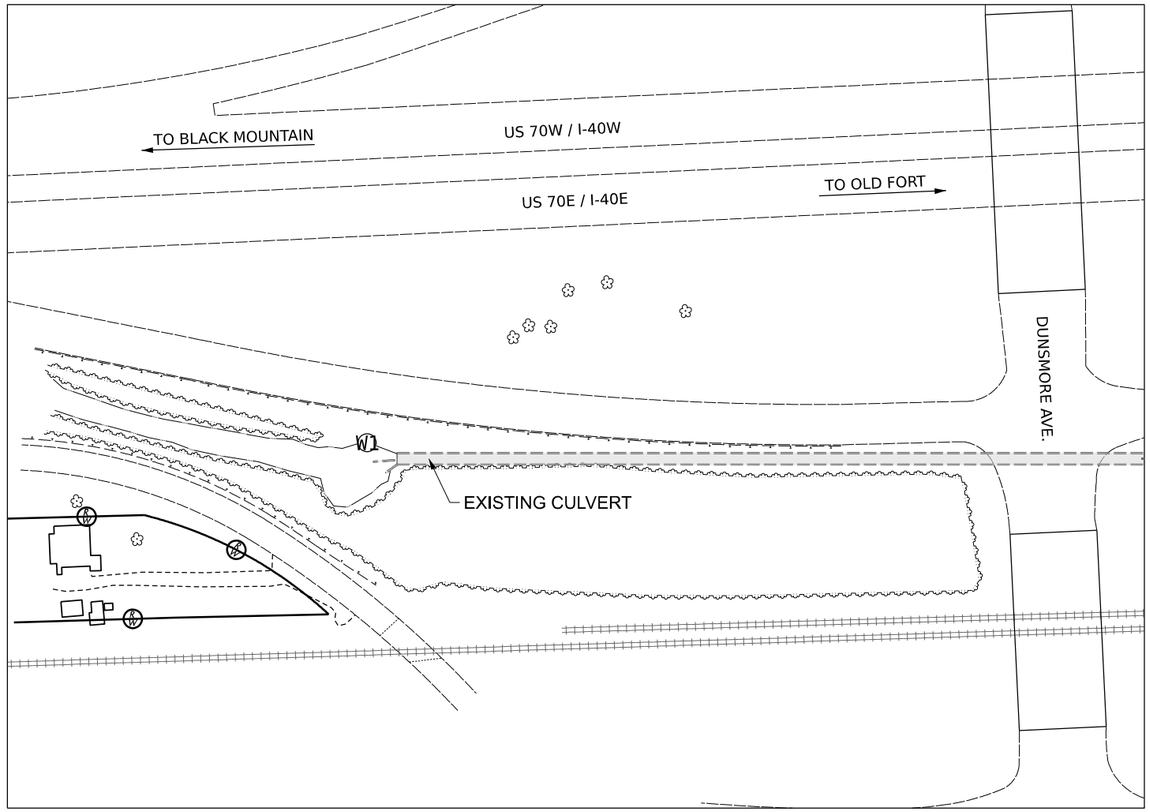





DOCUMENT NOT CONSIDERED FINAL UNLESS ALL SIGNATURES COMPLETED

DESIGN DATA

ADT 2022 = N/A
ADT 2040 = N/A

V = 35 MPH
* TTST = DUAL
FUNC CLASS =

PROJECT LENGTH

PROJECT LENGTHS FOR BRIDGE PROJECT 18313.1011276.PR:

TOTAL LENGTH PROJECT 18313.1011276.PR = 0.002 MILES

NCDOT Contact: JOEL M. DAVIS

Prepared in the Office of: VHB Engineering NC, P.C. (C-3705) 940 Main Campus Drive, Suite 500 Raleigh, NC 27606

2024 STANDARD SPECIFICATIONS

LETTING DATE:
DECEMBER 16, 2026

W. KEVIN FISCHER, PE
PROJECT ENGINEER

STRUCTURES ENGINEER

NORTH CAROLINA PROFESSIONAL SEAL 040384 ENGINEER JEFFREY C. WILSON

Signed by: Jeffrey C. Wilson 11/6/2026
5CA734DE9D5848B...

JEFFREY C. WILSON, PE
SIGNATURE:

STATE OF NORTH CAROLINA • DEPARTMENT OF TRANSPORTATION •

Docusign Envelope ID: ED032E8B-5C1B-8010-81E5-3A2681678C36

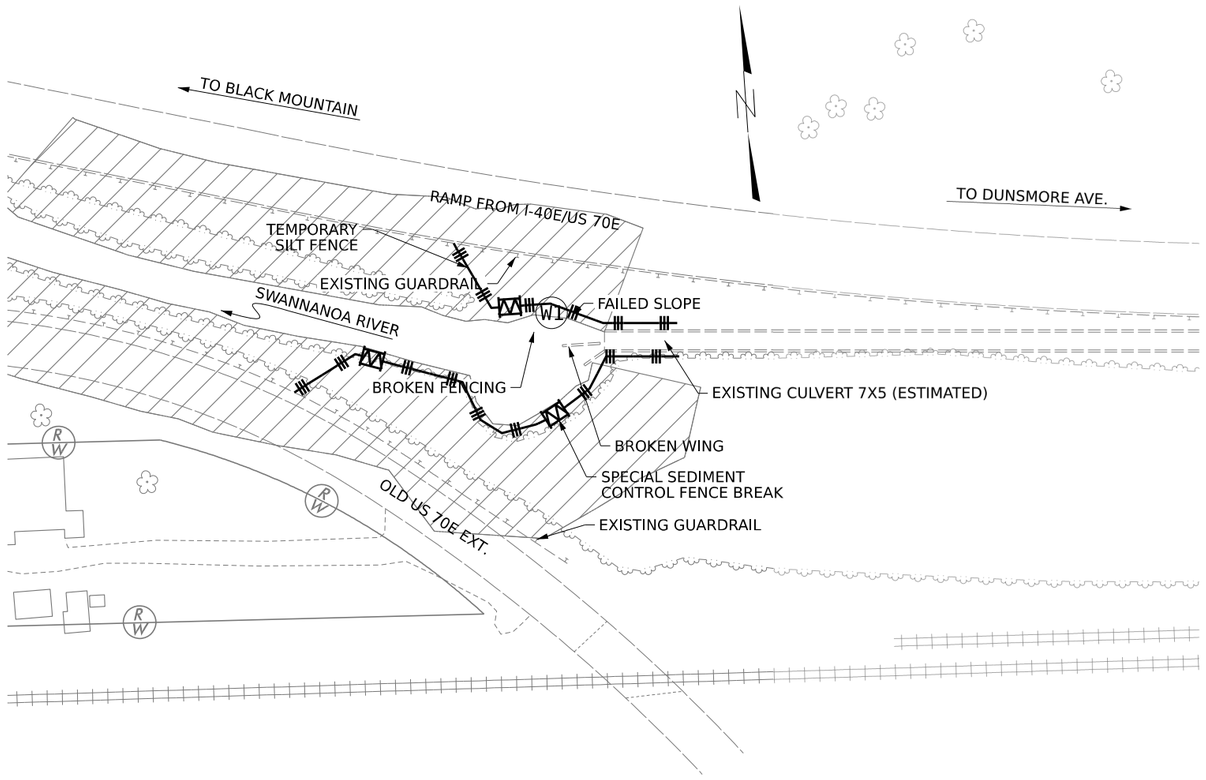



EROSION CONTROL SKETCH

ENVIRONMENTALLY SENSITIVE AREA SEE PROJECT SPECIAL PROVISIONS

THIS PROJECT HAS BEEN DESIGNED TO SENSITIVE WATERSHED STANDARDS.

ENVIRONMENTALLY SENSITIVE AREA(S) EXIST ON THIS PROJECT

Refer To E. C. Special Provisions for Special Considerations.

EC NOTES:

EROSION CONTROL SKETCH WAS NOT BASED ON ACTUAL SURVEY. CONTRACTOR TO FIELD VERIFY PLACEMENT OF PROPOSED EROSION CONTROL DEVICES AND QUANTITIES REQUIRED FOR THIS PROJECT.

PAY ITEM NO.	SEC. NO.	DESCRIPTION	QTY	UNIT
3656000000-E	876	GEOTEXTILE FOR DRAINAGE	210	SY
6000000000-E	1605	TEMPORARY SILT FENCE	840	LF
6006000000-E	1610	EROSION CONTROL STONE, CLASS A	35	TON
6012000000-E	1610	SEDIMENT CONTROL STONE	50	TON
6015000000-E	1615	TEMPORARY MULCHING	0.5	ACR
6018000000-E	1620	SEED FOR TEMPORARY SEEDING	100	LB
6021000000-E	1620	FERTILIZER FOR TEMPORARY SEEDING	0.5	TON
6024000000-E	1622	TEMPORARY SLOPE DRAINS	200	LF
6029000000-E	SP	SAFETY FENCE	260	LF
6036000000-E	1631	MATTING FOR EROSION CONTROL	6250	SY
6037000000-E	1629	COIR FIBER MAT	100	SY
6042000000-E	1632	1/4" HARDWARE CLOTH	60	LF
6070000000-N	1639	SPECIAL STILLING BASINS	2	EA
6084000000-E	1660	SEEDING AND MULCHING	0.5	ACR
6087000000-E	1660	MOWING	0.5	ACR
6090000000-E	1661	SEED FOR REPAIR SEEDING	50	LB
6093000000-E	1661	FERTILIZER FOR REPAIR SEEDING	0.25	TON
6096000000-E	1662	SEED FOR SUPPLEMENTAL SEEDING	50	LB
6108000000-E	1665	FERTILIZER TOPDRESSING	0.5	TON
6111000000-E	SP	IMPERVIOUS DIKE	71	LF
6114500000-N	1667	SPECIALIZED HAND MOWING	10	MHR
6117000000-N	1675	RESPONSE FOR EROSION CONTROL	13	EA
6117500000-N	SP	CONCRETE WASHOUT STRUCTURE	1	EA
6132000000-N	SP	GENERIC EROSION CONTROL ITEM - PREFABRICATED CONCRETE WASHOUT	2	EA

VHB Engineering NC, P.C. (C-3705)
940 Main Campus Drive, Suite 500
Raleigh, NC 27606

DRAWN BY : T.C. CULPEPPER DATE : 8/2026
CHECKED BY : J.R. HOPSON DATE : 8/2026
DESIGN ENGINEER OF RECORD: _____ DATE : _____

8/12/2026
c:\bms\vhb-pw-01\d0321808\BP-011-6000 Repair 01 EC-01.dgn
dhinnant

PROJECT NO. 18313.1011276.PR

BUNCOMBE COUNTY

STATION: _____

STATE OF NORTH CAROLINA
DEPARTMENT OF TRANSPORTATION
RALEIGH

REPAIRS FOR REINFORCED CONCRETE BOX CULVERT BP-011-6000

REVISIONS						SHEET NO.
NO.	BY:	DATE:	NO.	BY:	DATE:	EC-1
1			3			TOTAL SHEETS
2			4			10

Docusign Envelope ID: ED032E8B-5C1B-8010-81E5-3A2681678C36

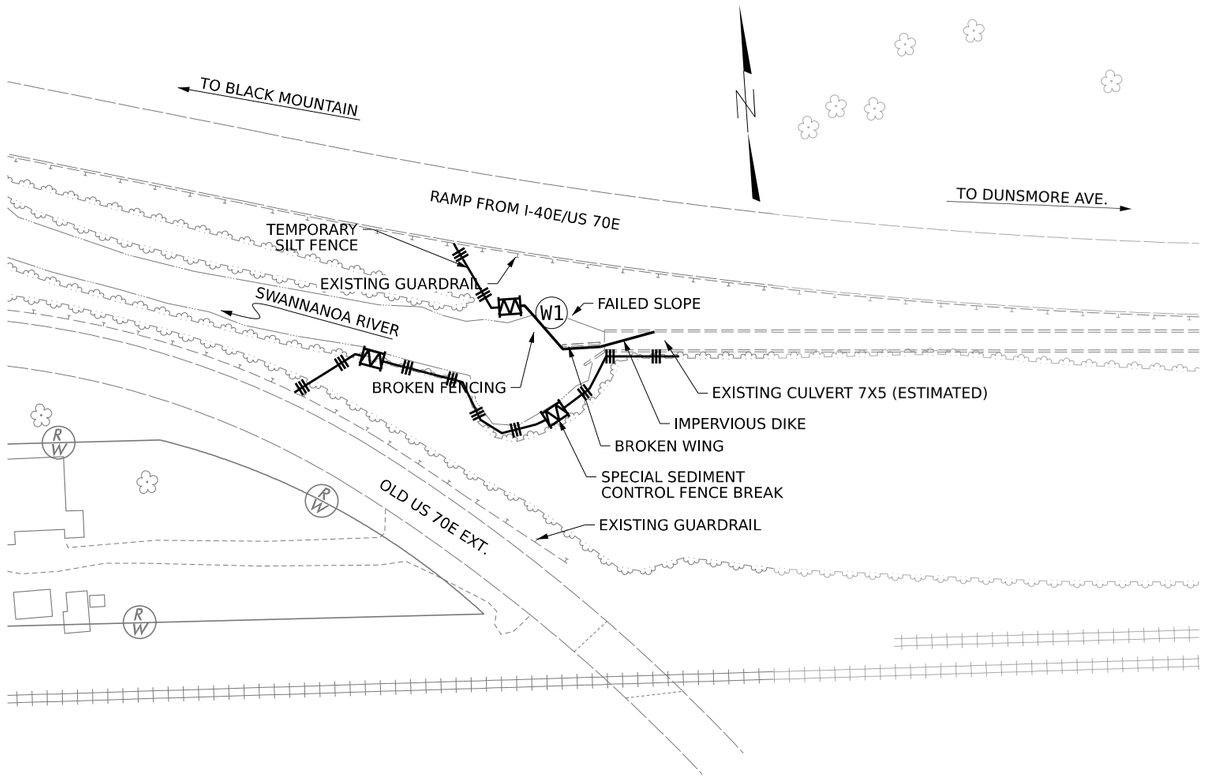



EROSION CONTROL SKETCH

CONSTRUCTION SEQUENCE

1. INSTALL IMPERVIOUS DIKE TO DIRECT FLOW AROUND BROKEN WING WALL.
2. DEWATER SITE UTILIZING SPECIAL STILLING BASIN.
3. REMOVE BROKEN WING WALL.

PROJECT NO. **18313.1011276.PR**

BUNCOMBE COUNTY

STATION: _____

STATE OF NORTH CAROLINA
DEPARTMENT OF TRANSPORTATION
RALEIGH

REPAIRS FOR REINFORCED CONCRETE BOX CULVERT BP-011-6000

REVISIONS						SHEET NO.
NO.	BY:	DATE:	NO.	BY:	DATE:	EC-2
1			3			TOTAL SHEETS
2			4			10

VHB Engineering NC, P.C. (C-3705)
940 Main Campus Drive, Suite 500
Raleigh, NC 27606

DRAWN BY : T.C. CULPEPPER DATE : 8/2026
CHECKED BY : J.R. HOPSON DATE : 8/2026
DESIGN ENGINEER OF RECORD: _____ DATE : _____

8/12/2026
c:\bms\vhb-pw-01\d0321808\BP-011-6000 Repair 02 EC-02.dgn
dhinnant

Docusign Envelope ID: ED032E8B-5C1B-8010-81E5-3A2681678C36

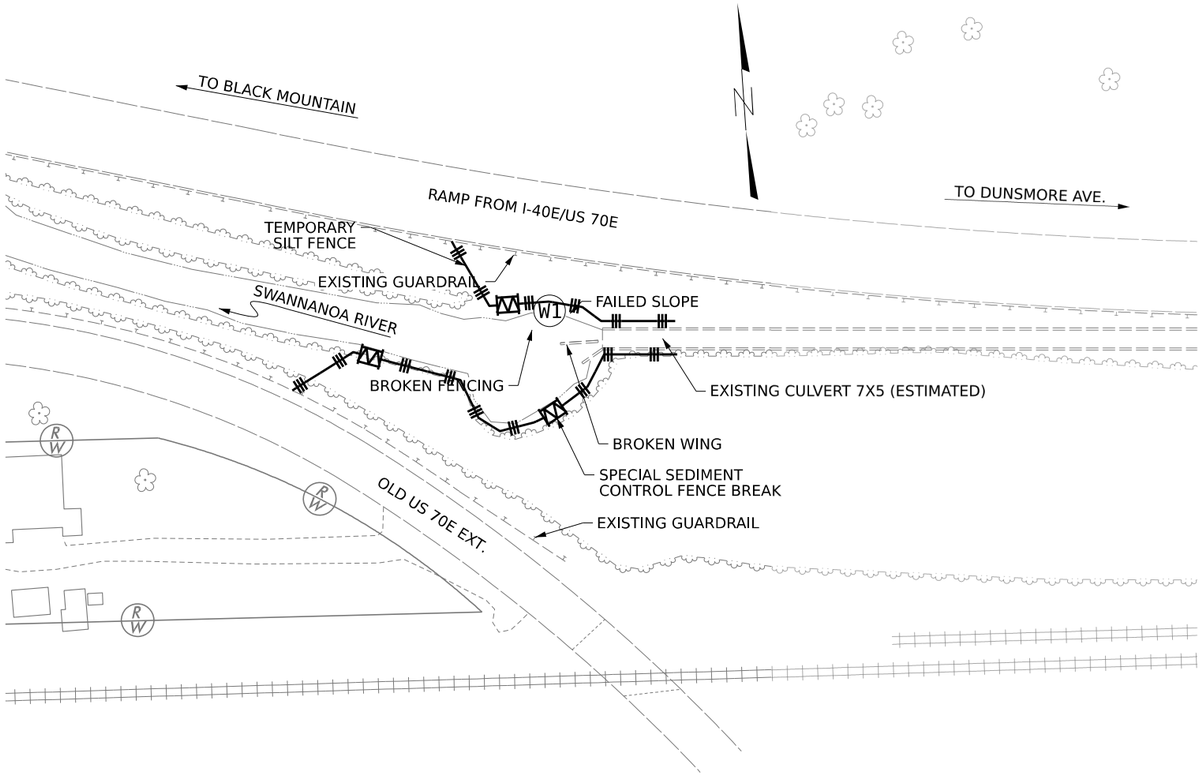



EROSION CONTROL SKETCH

CONSTRUCTION SEQUENCE

1. REPLACE WING WALL AND RECONSTRUCT SLOPE.
2. DEWATER SITE UTILIZING SPECIAL STILLING BASIN.
3. REMOVE IMPERVIOUS DIKE.

PROJECT NO. 18313.1011276.PR

BUNCOMBE COUNTY

STATION:

STATE OF NORTH CAROLINA
DEPARTMENT OF TRANSPORTATION
RALEIGH

REPAIRS FOR REINFORCED CONCRETE BOX CULVERT BP-011-6000

VHB Engineering NC, P.C. (C-3705)
940 Main Campus Drive, Suite 500
Raleigh, NC 27606

DRAWN BY :	T.C. CULPEPPER	DATE :	8/2026
CHECKED BY :	J.R. HOPSON	DATE :	8/2026
DESIGN ENGINEER OF RECORD:		DATE :	

REVISIONS						SHEET NO.
NO.	BY:	DATE:	NO.	BY:	DATE:	EC-3
1			3			TOTAL SHEETS
2			4			10

8/12/2026
c:\bms\vhb-pw-01\d0321808\BP-011-6000 Repair 03 EC-03.dgn
dhinnant

Docusign Envelope ID: ED032E8B-5C1B-8010-81E5-3A2681678C36

ONSITE CONCRETE WASHOUT STRUCTURE WITH LINER

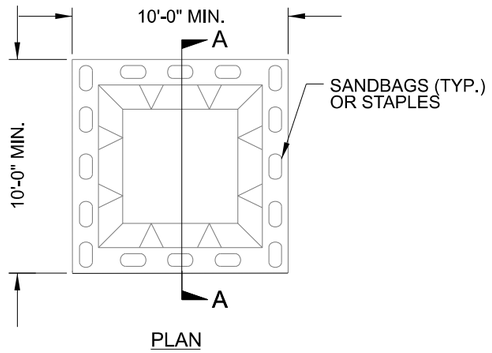

PLAN

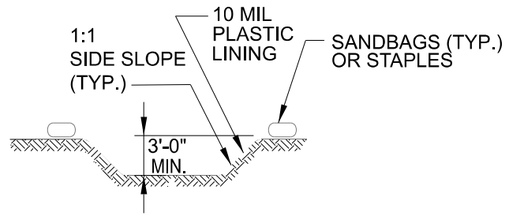

SECTION A-A



NOTES:
1. ACTUAL LOCATION DETERMINED IN FIELD

2. THE CONCRETE WASHOUT STRUCTURES SHALL BE MAINTAINED WHEN THE LIQUID AND/OR SOLID REACHES 75% OF THE STRUCTURES CAPACITY TO PROVIDE ADEQUATE HOLDING CAPACITY WITH A MINIMUM 12 INCHES OF FREEBOARD.

3.CONCRETE WASHOUT STRUCTURE NEEDS TO BE CLEARLY MARKED WITH SIGNAGE NOTING DEVICE.

BELOW GRADE WASHOUT STRUCTURE

NOT TO SCALE

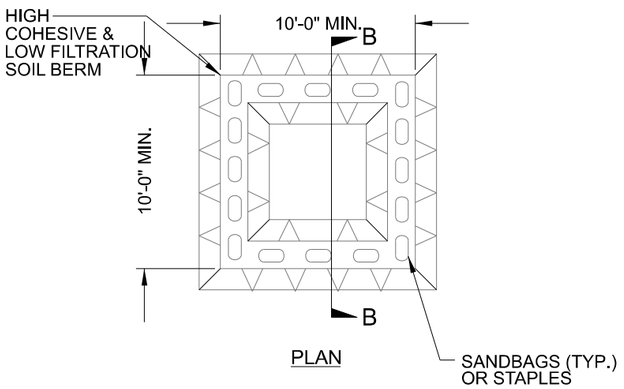

PLAN

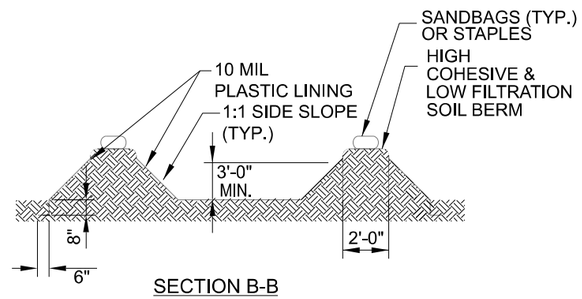

SECTION B-B



NOTES:
1. ACTUAL LOCATION DETERMINED IN FIELD

2. THE CONCRETE WASHOUT STRUCTURES SHALL BE MAINTAINED WHEN THE LIQUID AND/OR SOLID REACHES 75% OF THE STRUCTURES CAPACITY TO PROVIDE ADEQUATE HOLDING CAPACITY WITH A MINIMUM 12 INCHES OF FREEBOARD.

3.CONCRETE WASHOUT STRUCTURE NEEDS TO BE CLEARLY MARKED WITH SIGNAGE NOTING DEVICE.

ABOVE GRADE WASHOUT STRUCTURE

NOT TO SCALE

VHB Engineering NC, P.C. (C-3705)
940 Main Campus Drive, Suite 500
Raleigh, NC 27606

DRAWN BY : T.C. CULPEPPER DATE : 8/2026
CHECKED BY : J.R. HOPSON DATE : 8/2026
DESIGN ENGINEER OF RECORD: _____ DATE : _____

8/12/2026
c:\bms\vhb-pw-01\d0321808\BP-011-6000 Repair 04 EC-04 Conc Washout.dgn
dhinnant

PROJECT NO. 18313.1011276.PR
BUNCOMBE COUNTY
STATION: _____

STATE OF NORTH CAROLINA
DEPARTMENT OF TRANSPORTATION
RALEIGH

REPAIRS FOR REINFORCED CONCRETE BOX CULVERT BP-011-6000

REVISIONS						SHEET NO.
NO.	BY:	DATE:	NO.	BY:	DATE:	EC-4
1			3			TOTAL SHEETS
2			4			10

Docusign Envelope ID: ED032E8B-5C1B-8010-81E5-3A2681678C36

DIVISION OF HIGHWAYS
STATE OF NORTH CAROLINA

SOIL STABILIZATION TIMEFRAMES

SITE DESCRIPTION	*STABILIZATION TIME*	*TIMEFRAME EXCEPTIONS*
PERIMETER DIKES, SWALES, DITCHES AND SLOPES	7 DAYS	NONE
HIGH QUALITY WATER (HQW) ZONES	7 DAYS	NONE
SLOPES STEEPER THAN 3:1	7 DAYS	IF SLOPES ARE 10' OR LESS IN LENGTH AND ARE NOT STEEPER THAN 2:1, 14 DAYS ARE ALLOWED.
SLOPES 3:1 TO 4:1	14 DAYS	7 DAYS FOR SLOPES GREATER THAN 50' IN LENGTH WITH SLOPES STEEPER THAN 4:1. 7 DAYS FOR PERIMETER DIKES, SWALES, DITCHES PERIMETER SLOPES, AND HQW ZONES
ALL OTHER AREAS WITH SLOPES FLATTER THAN 4:1	14 DAYS	7 DAYS FOR PERIMETER DIKES, SWALES, DITCHES PERIMETER SLOPES, AND HQW ZONES

PROJECT NO. **18313.1011276.PR**

BUNCOMBE COUNTY

STATION: _____

VHB Engineering NC, P.C. (C-3705)
940 Main Campus Drive, Suite 500
Raleigh, NC 27606

DRAWN BY : **T.C. CULPEPPER** DATE : **8/2026**
CHECKED BY : **J.R. HOPSON** DATE : **8/2026**
DESIGN ENGINEER OF RECORD: _____ DATE : _____

STATE OF NORTH CAROLINA
DEPARTMENT OF TRANSPORTATION
RALEIGH

REPAIRS FOR REINFORCED CONCRETE BOX CULVERT BP-011-6000

REVISIONS						SHEET NO.
NO.	BY:	DATE:	NO.	BY:	DATE:	EC-5
1			3			TOTAL SHEETS
2			4			10

8/12/2026
c:\bms\vhb-pw-01\d0321808\BP-011-6000 Repair 05 EC-05 Soil Stabilization.dgn
dhinnant

Docusign Envelope ID: ED032E8B-5C1B-8010-81E5-3A2681678C36

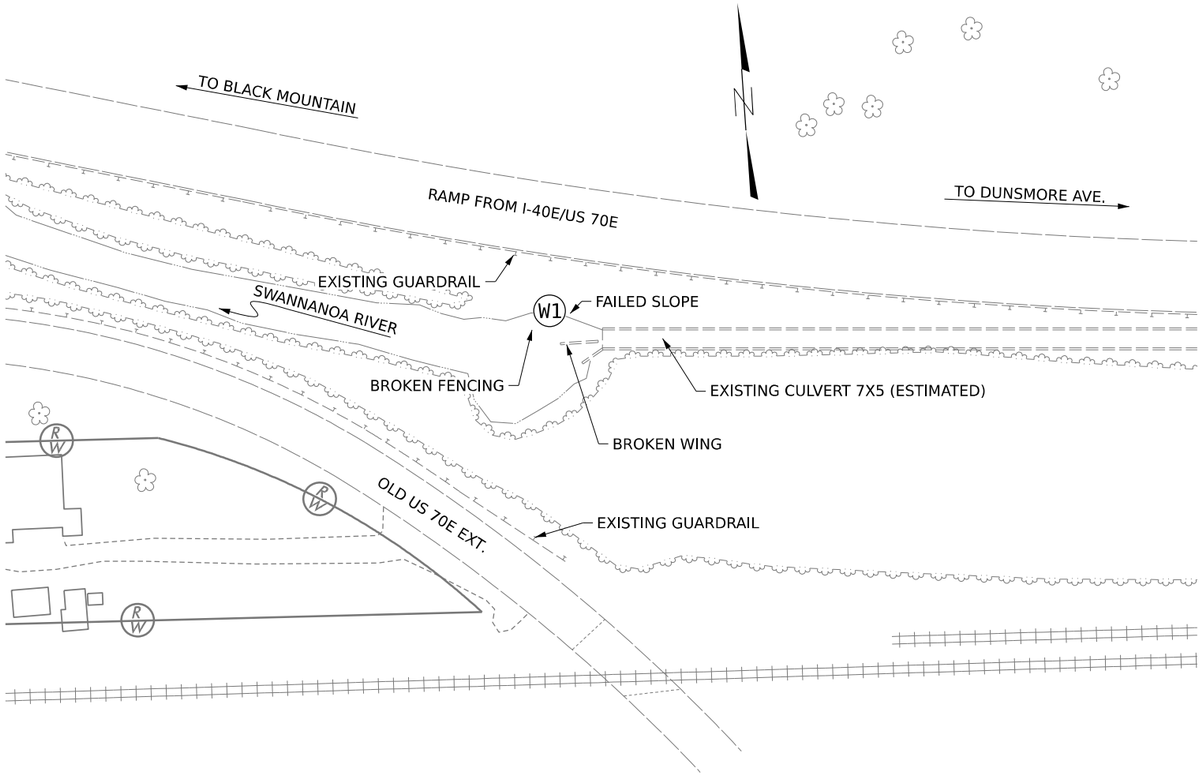



LOCATION SKETCH

SCOPE OF WORK

- PLACE REQUIRED TRAFFIC CONTROL, REMOVE GUARDRAIL AS NECESSARY AND GRADE ACCESS FROM I-40.
- DIVERT WATER AND INSTALL IMPERVIOUS DIKE FOR WINGWALL REPAIR.
- REMOVE FENCING AND EXISTING WING AND ANY FILL AS NECESSARY.
- INSTALL SHEET PILE WING AND GROUND ANCHORS AT W1.
- FORM AND POUR NEW CONCRETE CONNECTION BETWEEN SHEET PILE WING AND CULVERT BARREL AND CONCRETE COPING.
- BACKFILL BEHIND WING WITH SELECT MATERIAL CLASS III AS NECESSARY.
- REINSTALL CHAIN LINK FENCE AND GUARDRAIL.

NOTES

EXISTING DIMENSIONS AND BRIDGE CONDITIONS ARE FROM BEST INFORMATION AVAILABLE; THE CONTRACTOR SHALL FIELD VERIFY THE INFORMATION SHOWN ON THE PLANS AND NOTIFY THE ENGINEER IF ACTUAL DIMENSIONS AND CONDITIONS DIFFER; THE CONTRACTOR SHALL HAVE NO CLAIM WHATSOEVER AGAINST THE DEPARTMENT OF TRANSPORTATION FOR ANY DELAYS OR ADDITIONAL COST INCURRED BASED ON DIFFERENCES BETWEEN THAT SHOWN ON THE PLANS AND THE ACTUAL CONDITIONS AT THE PROJECT SITE.

GRADING PAY ITEM INCLUDES ALL WORK NECESSARY TO GRADE ACCESS FROM I-40.

Line Item	Sec No.	Description	Quantity	Unit
0000100000-N	800	MOBILIZATION	1	LS
0043000000-N	226	GRADING	1	LS
0194000000-E	265	SELECT GRANULAR MATERIAL, CLASS III	50	CY
3345000000-E	864	REMOVE & RESET EXISTING GUARDRAIL	50	LF
3572000000-E	867	CHAIN LINK FENCE RESET	100	LF
8035000000-N	402	REMOVAL OF EXISTING STRUCTURES	1	LS
8196000000-E	420	CLASS A CONCRETE (CULVERT)	6	CY
8245000000-E	425	REINFORCING STEEL (CULVERT)	516	LB
8847000000-E	SP	ANCHORED SHEET PILE RETAINING WALL	350	SF

PROJECT NO. 18313.1011276.PR

BUNCOMBE COUNTY

STATION:

VHB Engineering NC, P.C. (C-3705)
940 Main Campus Drive, Suite 500
Raleigh, NC 27606

NORTH CAROLINA PROFESSIONAL SEAL 040384 ENGINEER JEFFREY C. WILSON

Signed by: Jeffrey C. Wilson 11/5/2026
5CA734DE9D56488...

STATE OF NORTH CAROLINA
DEPARTMENT OF TRANSPORTATION
RALEIGH

REPAIRS FOR REINFORCED CONCRETE BOX CULVERT BP-011-6000

DRAWN BY : D.B. HINNANT DATE : 8/2026
CHECKED BY : K. FISCHER DATE : 8/2026
DESIGN ENGINEER OF RECORD: J.C. WILSON DATE : 8/2026

DOCUMENT NOT CONSIDERED FINAL UNLESS ALL SIGNATURES COMPLETED

REVISIONS						SHEET NO.
NO.	BY:	DATE:	NO.	BY:	DATE:	S-1
1			3			TOTAL SHEETS
2			4			10

11/5/2026
c:\bms\vhb-pw-01\d0321808\BP-011-6000 Repair 06 LS S-01.dgn
dhinnant

Docusign Envelope ID: ED032E8B-5C1B-8010-81E5-3A2681678C36

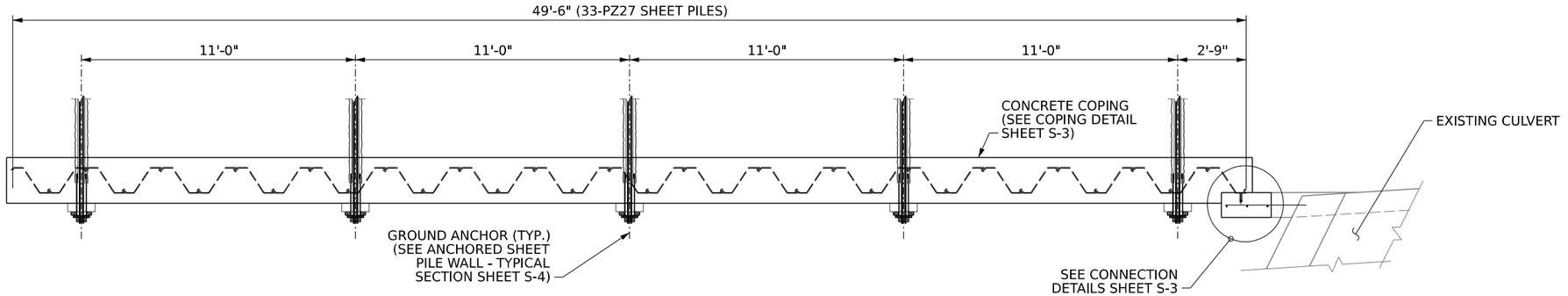

PROPOSED PLAN W1 DOWNSTREAM END

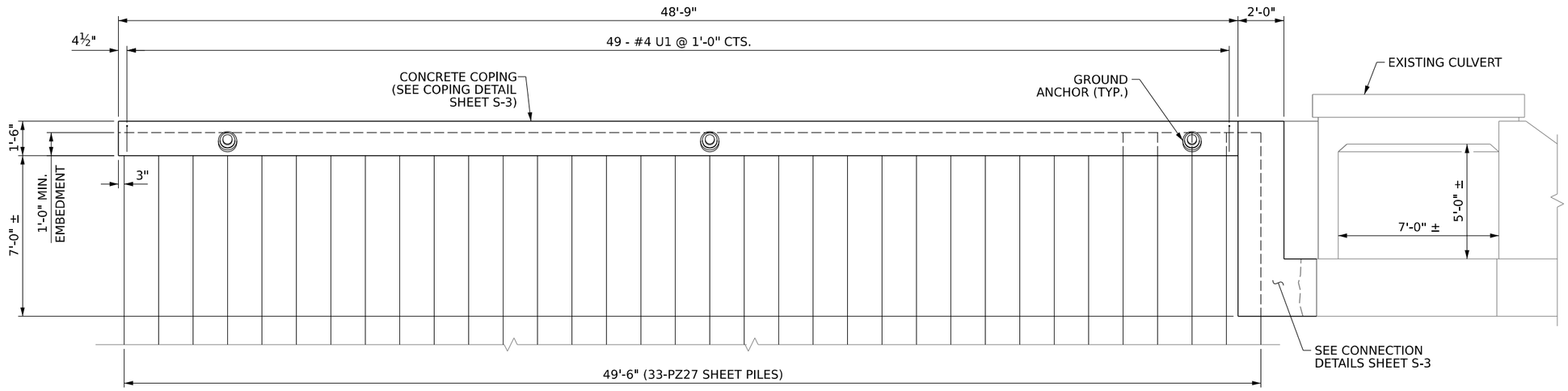

PROPOSED ELEVATION W1 DOWNSTREAM END

PROJECT NO. 18313.1011276.PR

BUNCOMBE COUNTY

STATION: _____

VHB Engineering NC, P.C. (C-3705)
940 Main Campus Drive, Suite 500
Raleigh, NC 27606

DRAWN BY : D.B. HINNANT DATE : 8/2026
CHECKED BY : K. FISCHER DATE : 8/2026
DESIGN ENGINEER OF RECORD: J.C. WILSON DATE : 8/2026

8/12/2026
c:\bms\vhb-pw-01\d0321808\BP-011-6000 Repair 07 Wing S-02.dgn
dhinnant

NORTH CAROLINA PROFESSIONAL SEAL 040384 ENGINEER JEFFREY C. WILSON

Signed by: Jeffrey C. Wilson 11/5/2026
5CA734DE9D5844B...

DOCUMENT NOT CONSIDERED FINAL UNLESS ALL SIGNATURES COMPLETED

STATE OF NORTH CAROLINA
DEPARTMENT OF TRANSPORTATION
RALEIGH

REPAIRS FOR REINFORCED CONCRETE BOX CULVERT BP-011-6000

REVISIONS						SHEET NO.
NO.	BY:	DATE:	NO.	BY:	DATE:	S-2
1			3			TOTAL SHEETS
2			4			10

Docusign Envelope ID: ED032E8B-5C1B-8010-81E5-3A2681678C36

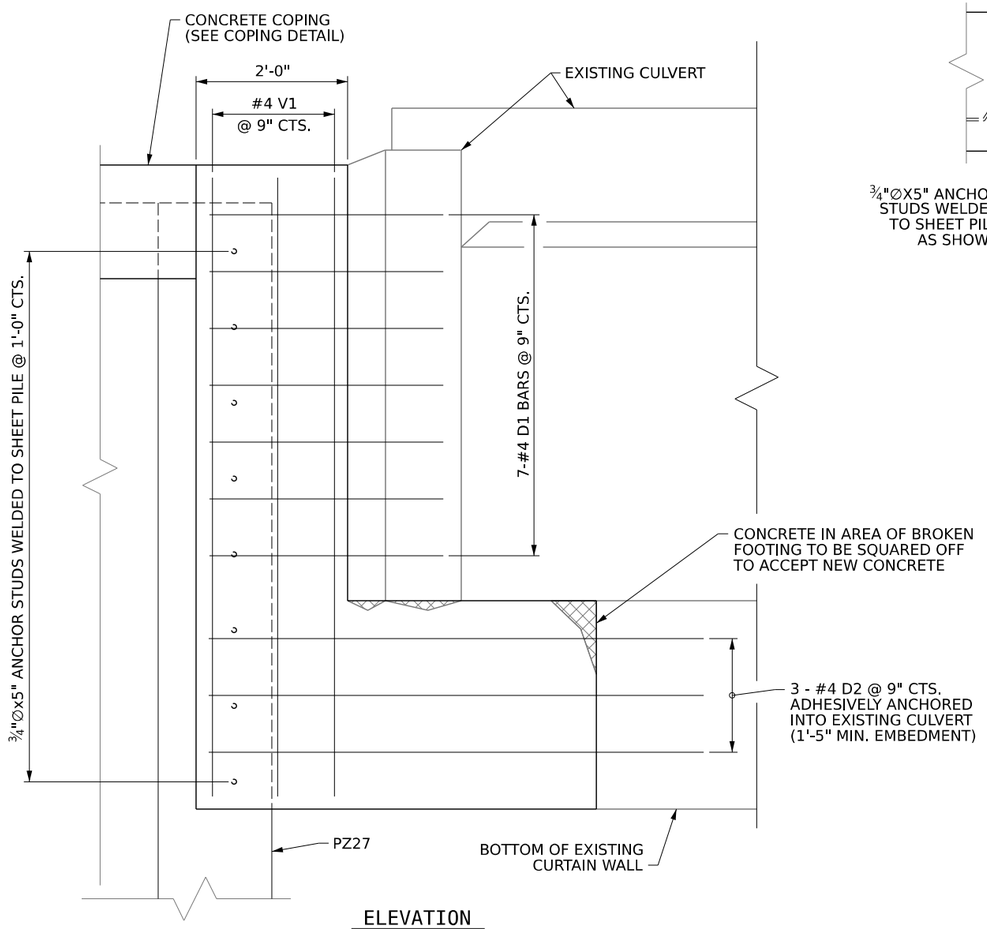

ELEVATION

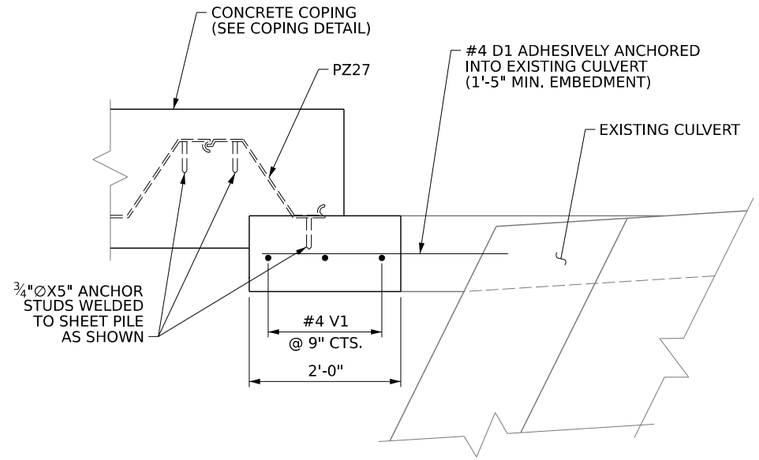

PLAN

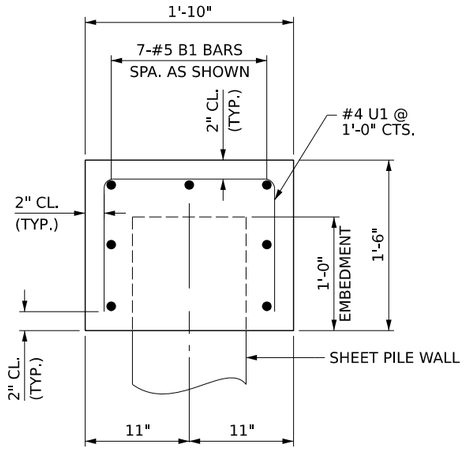

COPING DETAIL

BAR TYPES

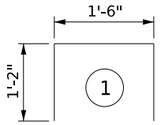

ALL BAR DIMENSIONS ARE OUT TO OUT

BILL OF MATERIAL

WING W1

BAR	NO	SIZE	TYPE	LENGTH	WEIGHT
B1	7	#5	STR	48' - 3"	352
D1	7	#4	STR	3' - 3"	15
D2	3	#4	STR	4' - 0"	8
V1	3	#4	STR	8' - 0"	16
U1	49	#4	1	3' - 10"	125

REINFORCING STEEL LBS.	516
CLASS A CONCRETE C.Y.	
CONNECTION =	1.0
COPING =	5.0
TOTAL =	6.0

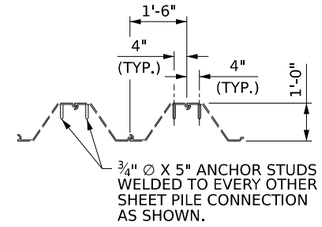

ANCHOR STUD DETAIL

CONNECTION DETAILS

PROJECT NO. 18313.1011276.PR

BUNCOMBE COUNTY

STATION:

STATE OF NORTH CAROLINA
DEPARTMENT OF TRANSPORTATION
RALEIGH

REPAIRS FOR REINFORCED CONCRETE BOX CULVERT BP-011-6000

VHB Engineering NC, P.C. (C-3705)
940 Main Campus Drive, Suite 500
Raleigh, NC 27606

NORTH CAROLINA PROFESSIONAL SEAL 040384 ENGINEER JEFFREY C. WILSON

Signed by: Jeffrey C. Wilson 11/5/2026
5CA734DE9D5848B...

DRAWN BY : D.B. HINNANT DATE : 8/2026
CHECKED BY : K. FISCHER DATE : 8/2026
DESIGN ENGINEER OF RECORD: J.C. WILSON DATE : 8/2026

DOCUMENT NOT CONSIDERED FINAL UNLESS ALL SIGNATURES COMPLETED

REVISIONS						SHEET NO.
NO.	BY:	DATE:	NO.	BY:	DATE:	S-3
1			3			TOTAL SHEETS
2			4			10

8/12/2026
c:\bms\vhb-pw-01\d0321808\BP-011-6000 Repair 08 Wing Details S-03.dgn
dhinnant

Docusign Envelope ID: ED032E8B-5C1B-8010-81E5-3A2681678C36

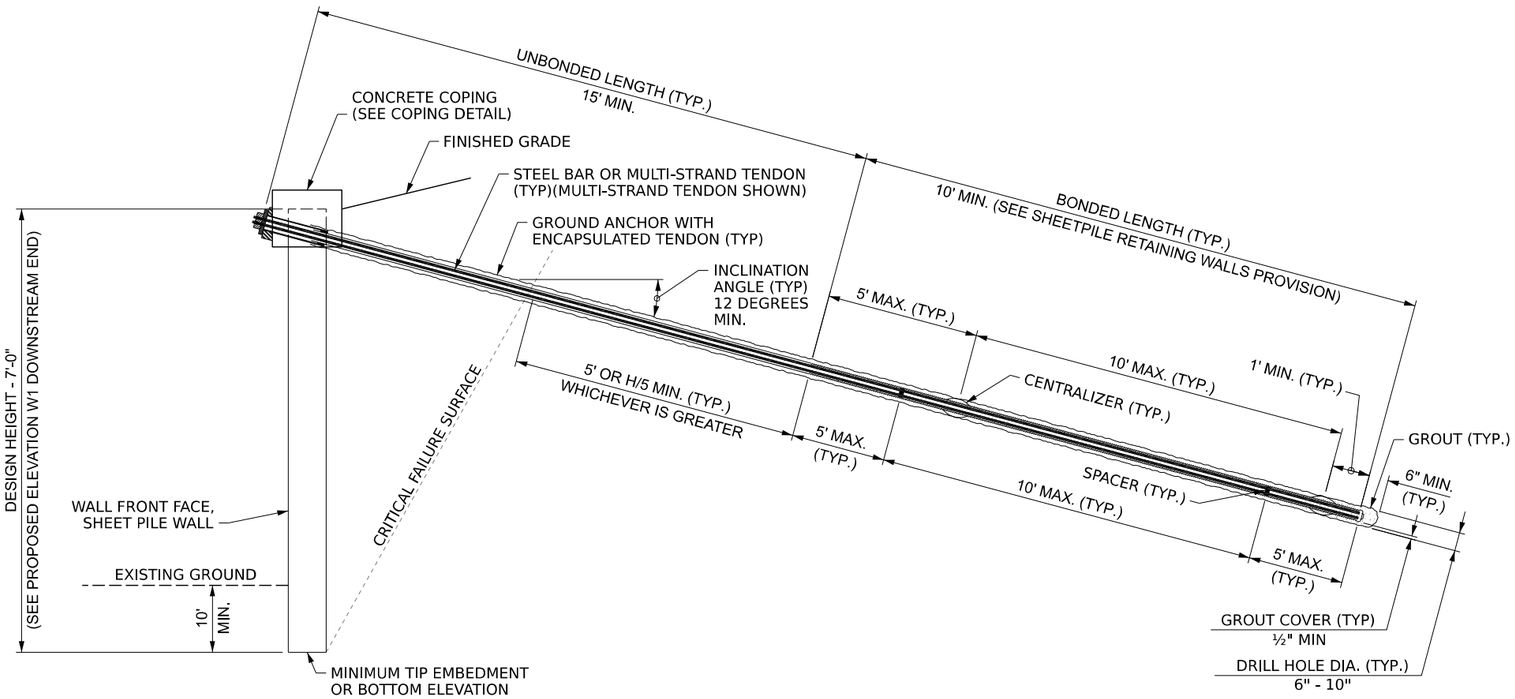

ANCHORED SHEET PILE WALL - TYPICAL SECTION

NOTES:

FOR ANCHORED SHEET PILE RETAINING WALLS, SEE ANCHORED SHEET PILE RETAINING WALLS PROVISION.

FOR STEEL BEAM GUARDRAIL, SEE ROADWAY PLANS AND SECTION 862 OF THE STANDARD SPECIFICATIONS.

DESIGN GROUND ANCHOR FOR INTERNAL, EXTERNAL, AND GLOBAL STABILITY.

BEFORE BEGINNING ANCHORED WALL DESIGN FOR W1, SURVEY WALL LOCATION AND SUBMIT A REVISED WALL PROFILE VIEW (WALL ENVELOPE) FOR REVIEW. DO NOT START WALL DESIGN OR CONSTRUCTION UNTIL THE REVISED WALL ENVELOPE IS ACCEPTED.

DESIGN W1 FOR THE FOLLOWING:
1) H = DESIGN HEIGHT + EMBEDMENT
2) DESIGN LIFE = 100 YEARS
3) IN-SITU ASSUMED MATERIAL PARAMETERS (SOIL):
   UNIT WEIGHT, g = 120 LB/CF
   FRICTION ANGLE, f = 28 DEGREES
   COHESION, c = 0 LB/SF

DESIGN WINGWALL W1 FOR A LIVE LOAD (TRAFFIC) SURCHARGE.

EXTEND SHEET PILES MINIMUM 10 FT. BELOW STREAM BED

IN LIEU OF A DRILLED AND GROUTED ANCHOR, A CANTILEVERED OR DEAD MAN ALTERNATIVE MAY BE CONSIDERED. IF ONE OF THESE OPTIONS ARE PREFERRED, A DESIGN SUBMITTAL INCLUDING REQUIRED ANCHOR CAPACITY, ANCHOR LOCATION, BAR OR TENDON PROPOSED, WALL ANCHORAGE DETAILS AND THE INSTALLATION PROCEDURE WILL NEED TO BE APPROVED PRIOR TO BEGINNING CONSTRUCTION.

PROJECT NO. 18313.1011276.PR

BUNCOMBE COUNTY

STATION:

VHB Engineering NC, P.C. (C-3705)
940 Main Campus Drive, Suite 500
Raleigh, NC 27606

NORTH CAROLINA PROFESSIONAL SEAL 040384 ENGINEER JEFFREY C. WILSON

Signed by: Jeffrey C. Wilson 11/5/2026
5CA734DE9D5848B...

STATE OF NORTH CAROLINA
DEPARTMENT OF TRANSPORTATION
RALEIGH

REPAIRS FOR REINFORCED CONCRETE BOX CULVERT BP-011-6000

DRAWN BY :	D.B. HINNANT — DATE : 8/2026
CHECKED BY :	K. FISCHER — DATE : 8/2026
DESIGN ENGINEER OF RECORD:	J.C. WILSON — DATE : 8/2026

DOCUMENT NOT CONSIDERED FINAL UNLESS ALL SIGNATURES COMPLETED

REVISIONS						SHEET NO.
NO.	BY:	DATE:	NO.	BY:	DATE:	S-4
1			3			TOTAL SHEETS
2			4			10

8/12/2026
c:\bms\vhb-pw-01\d0321808\BP-011-6000 Repair 09 SPWall S-04.dgn
dhinnant

Docusign Envelope ID: ED032E8B-5C1B-8010-81E5-3A2681678C36

MANAGEMENT STRATEGIES

THE FOLLOWING LISTED WORK ZONE STRATEGIES ARE RECOMMENDED FOR INCLUSION WITHIN THIS TRANSPORTATION MANAGEMENT PLAN (TMP).

RECOMMENDED STRATEGIES:

TRAFFIC MANAGEMENT STRATEGIES:
- LANE SHIFTS OR CLOSURES
- SHOULDER CLOSURES
- NIGHT WORK
- WEEKEND WORK
- WORK HOUR RESTRICTIONS FOR PEAK TRAVEL

WORK ZONE SAFETY & MOBILITY STRATEGIES:
- SEQUENTIAL LIGHTING
- PRESENCE LIGHTING

TRAFFIC / INCIDENT MANAGEMENT & SPEED ENFORCEMENT STRATEGIES:
- ITS FOR TRAFFIC MONITORING / MANAGEMENT (SMART WORKZONE)
- COORDINATION WITH STATE TRAFFIC OPERATIONS CENTER (STOC)

CONTRACTING & INNOVATIVE CONSTRUCTION STRATEGIES:
- INTERMEDIATE CONTRACT TIMES / LIQUIDATED DAMAGES

PHASING

MAINTAIN VEHICULAR ACCESS TO ALL RESIDENCES AND BUSINESSES DURING THE LIFE OF THE CONTRACT UNLESS OTHERWISE NOTED IN THE PHASING OR DIRECTED BY THE ENGINEER.

PHASE I

STEP 1 – USING RSD 1101.04, SHEET 2 OF 2 AS NEEDED, CLOSE THE OUTSIDE SHOULDER ON THE I-40/US 70 EASTBOUND OFF RAMP, REMOVE GUARDRAIL AND GRADE ACCESS TO THE SITE, AND COMPLETE THE REPAIRS.

STEP 2 – RESTORE THE SIDE SLOPE, REPLACE THE GUARDRAIL, AND REMOVE ALL TEMPORARY TRAFFIC CONTROL DEVICES AND MARKINGS AND OPEN ALL LANES TO TRAFFIC.

GENERAL NOTES

CHANGES MAY BE REQUIRED WHEN PHYSICAL DIMENSIONS IN THE DETAIL DRAWINGS, STANDARD DETAILS, AND ROADWAY DETAILS ARE NOT ATTAINABLE TO MEET FIELD CONDITIONS OR RESULT IN DUPLICATE OR UNDESIRED OVERLAPPING OF DEVICES. MODIFICATION MAY INCLUDE: MOVING, SUPPLEMENTING, COVERING, OR REMOVAL OF DEVICES AS DIRECTED BY THE ENGINEER.
THE FOLLOWING GENERAL NOTES APPLY AT ALL TIMES FOR THE DURATION OF THE CONSTRUCTION PROJECT EXCEPT WHEN OTHERWISE NOTED IN THE PLAN OR DIRECTED BY THE ENGINEER.

THE FOLLOWING GENERAL NOTES APPLY AT ALL TIMES FOR THE DURATION OF THE CONSTRUCTION PROJECT EXCEPT WHEN OTHERWISE NOTED IN THE PLAN OR DIRECTED BY THE ENGINEER.

TIME RESTRICTIONS

A) DO NOT CLOSE OR NARROW TRAVEL LANES AS FOLLOWS:

ROAD NAME	DAY AND TIME RESTRICTIONS
I-40/US 70 AND RAMPS	6:00 A.M. TO 7:00 P.M. MONDAY THRU SUNDAY

B) DO NOT CLOSE OR NARROW TRAVEL LANES DURING HOLIDAYS AND SPECIAL EVENTS AS FOLLOWS:

ROAD NAME
I-40/US 70 AND RAMPS

HOLIDAY
1. FOR ANY UNEXPECTED OCCURRENCE THAT CREATES UNUSUALLY HIGH TRAFFIC VOLUMES, AS DIRECTED BY THE ENGINEER.
2. FOR NEW YEAR'S, BETWEEN THE HOURS OF 6:00 A.M. DECEMBER 31st TO 7:00 P.M. JANUARY 2ND. IF NEW YEAR'S DAY IS ON A FRIDAY, SATURDAY, SUNDAY, OR MONDAY THEN UNTIL 7:00 P.M. THE FOLLOWING TUESDAY.
3. FOR EASTER, BETWEEN THE HOURS OF 6:00 A.M. THURSDAY AND 7:00 P.M. MONDAY.
4. FOR MEMORIAL DAY, BETWEEN THE HOURS OF 6:00 A.M. FRIDAY TO 7:00 P.M. TUESDAY.
5. FOR INDEPENDENCE DAY, BETWEEN THE HOURS OF 6:00 A.M. THE DAY BEFORE INDEPENDENCE DAY AND 7:00 P.M. THE DAY AFTER INDEPENDENCE DAY.

   IF INDEPENDENCE DAY IS ON A FRIDAY, SATURDAY, SUNDAY, OR MONDAY THEN BETWEEN THE HOURS OF 6:00 A.M. THE THURSDAY BEFORE INDEPENDENCE DAY AND 7:00 P.M. THE TUESDAY AFTER INDEPENDENCE DAY.
6. FOR LABOR DAY, BETWEEN THE HOURS OF 6:00 A.M. FRIDAY AND 7:00 P.M. TUESDAY.
7. FOR THANKSGIVING DAY, BETWEEN THE HOURS OF 6:00 A.M. TUESDAY TO 7:00 P.M. MONDAY.
8. FOR CHRISTMAS, BETWEEN THE HOURS OF 6:00 A.M. THE FRIDAY BEFORE THE WEEK OF CHRISTMAS DAY AND 7:00 P.M. THE FOLLOWING TUESDAY AFTER THE WEEK OF CHRISTMAS.
9. FOR LEAF SEASON, BETWEEN THE HOURS OF 6:00 A.M. AND 7:00 P.M. EACH DAY FOR THE FIRST THREE WEEKS IN OCTOBER.

LANE AND SHOULDER CLOSURE REQUIREMENTS

A) REMOVE LANE CLOSURE DEVICES FROM THE LANE WHEN WORK IS NOT BEING PERFORMED BEHIND THE LANE CLOSURE OR WHEN A LANE CLOSURE IS NO LONGER NEEDED OR AS DIRECTED BY THE ENGINEER.

B) WHEN PERSONNEL AND/OR EQUIPMENT ARE WORKING WITHIN 15 FT OF AN OPEN TRAVEL LANE, CLOSE THE NEAREST OPEN SHOULDER USING ROADWAY STANDARD DRAWING NO. 1101.04 UNLESS THE WORK AREA IS PROTECTED BY BARRIER OR GUARDRAIL OR A LANE CLOSURE IS INSTALLED.

C) WHEN PERSONNEL AND/OR EQUIPMENT ARE WORKING WITHIN 5 FT OF AN OPEN TRAVEL LANE ON AN UNDIVIDED FACILITY, CLOSE THE NEAREST OPEN TRAVEL LANE USING ROADWAY STANDARD DRAWING NO. 1101.02 UNLESS THE WORK AREA IS PROTECTED BY BARRIER OR GUARDRAIL.

WHEN PERSONNEL AND/OR EQUIPMENT ARE WORKING WITHIN 10 FT OF AN OPEN TRAVEL LANE ON A DIVIDED FACILITY, CLOSE THE NEAREST OPEN TRAVEL LANE USING ROADWAY STANDARD DRAWING NO. 1101.02 UNLESS THE WORK AREA IS PROTECTED BY BARRIER OR GUARDRAIL.

D) WHEN PERSONNEL AND/OR EQUIPMENT ARE WORKING WITHIN A LANE OF TRAVEL OF AN UNDIVIDED OR DIVIDED FACILITY, CLOSE THE LANE ACCORDING TO THE TRAFFIC CONTROL PLANS, ROADWAY STANDARD DRAWINGS, OR AS DIRECTED BY THE ENGINEER. CONDUCT THE WORK SO THAT ALL PERSONNEL AND/OR EQUIPMENT REMAIN WITHIN THE CLOSED TRAVEL LANE.

E) DO NOT WORK SIMULTANEOUSLY WITHIN 15 FT ON BOTH SIDES OF AN OPEN TRAVELWAY, RAMP, OR LOOP WITHIN THE SAME LOCATION UNLESS PROTECTED WITH GUARDRAIL OR BARRIER.

F) USE SEQUENTIAL FLASHING WARNING LIGHTS ON DRUMS USED FOR THE MERGING TAPERS OF NIGHTTIME LANE CLOSURES IN ACCORDANCE WITH SECTION 1140 IN THE STANDARD SPECIFICATIONS FOR ROADS AND STRUCTURES.

G) NOTIFY THE NCDOT STATEWIDE TRANSPORTATION OPERATIONS CENTER (STOC) AT 877-627-7862 APPROXIMATELY 30 MINUTES PRIOR TO INSTALLING AND WITHIN 15 MINUTES AFTER REMOVING LANE CLOSURES ON INTERSTATES, FREEWAYS, CONTROLLED ACCESS FACILITIES, AND US ROUTES.

PAVEMENT EDGE DROP OFF REQUIREMENTS

H) BACKFILL AT A 6:1 SLOPE UP TO THE EDGE AND ELEVATION OF EXISTING PAVEMENT IN AREAS ADJACENT TO AN OPENED TRAVEL LANE THAT HAS AN EDGE OF PAVEMENT DROP-OFF AS FOLLOWS:

BACKFILL DROP-OFFS THAT EXCEED 2 INCHES ON ROADWAYS WITH POSTED SPEED LIMITS OF 45 MPH OR GREATER.

BACKFILL DROP-OFFS THAT EXCEED 3 INCHES ON ROADWAYS WITH POSTED SPEED LIMITS LESS THAN 45 MPH.

BACKFILL WITH SUITABLE COMPACTED MATERIAL, AS APPROVED BY THE ENGINEER, AT NO EXPENSE TO THE DEPARTMENT.

I) DO NOT EXCEED A DIFFERENCE OF 2 INCHES IN ELEVATION BETWEEN OPEN LANES OF TRAFFIC FOR NOMINAL LIFTS OF 1.5 INCHES. INSTALL ADVANCE WARNING "UNEVEN LANES" SIGNS (W8-11) IN ADVANCE AND A MINIMUM OF EVERY HALF MILE THROUGHOUT THE UNEVEN AREA.

TRAFFIC PATTERN ALTERATIONS

J) NOTIFY THE ENGINEER THIRTY (30) CALENDAR DAYS PRIOR TO ANY TRAFFIC PATTERN ALTERATION.

SIGNING

K) INSTALL ADVANCE WORK ZONE WARNING SIGNS WHEN WORK IS WITHIN 40 FT FROM THE EDGE OF TRAVEL LANE AND NO MORE THAN THREE (3) DAYS PRIOR TO THE BEGINNING OF CONSTRUCTION.

L) ENSURE ALL NECESSARY SIGNING IS IN PLACE PRIOR TO ALTERING ANY TRAFFIC PATTERN.

TRAFFIC BARRIER

M) INSTALL TEMPORARY BARRIER ACCORDING TO THE TRANSPORTATION MANAGEMENT PLANS A MAXIMUM OF TWO (2) WEEKS PRIOR TO BEGINNING WORK IN ANY LOCATION. ONCE TEMPORARY BARRIER IS INSTALLED AT ANY LOCATION PROCEED IN A CONTINUOUS MANNER TO COMPLETE THE PROPOSED WORK IN THAT LOCATION UNLESS OTHERWISE STATED IN THE TRANSPORTATION MANAGEMENT PLANS OR AS DIRECTED BY THE ENGINEER.

DO NOT PLACE BARRIER DIRECTLY ON ANY SURFACE OTHER THAN ASPHALT OR CONCRETE.

ONCE TEMPORARY BARRIER IS INSTALLED AT ANY LOCATION AND NO WORK IS PERFORMED BEHIND THE TEMPORARY BARRIER FOR A PERIOD LONGER THAN TWO (2) MONTHS, REMOVE / RESET TEMPORARY BARRIER AT NO COST TO THE DEPARTMENT UNLESS OTHERWISE STATED IN THE TRANSPORTATION MANAGEMENT PLANS, TEMPORARY BARRIER IS PROTECTING A HAZARD, OR AS DIRECTED BY THE ENGINEER.

INSTALL TEMPORARY BARRIER WITH THE TRAFFIC FLOW BEGINNING WITH THE UPSTREAM SIDE OF TRAFFIC. REMOVE TEMPORARY BARRIER AGAINST THE TRAFFIC FLOW BEGINNING WITH THE DOWNSTREAM SIDE OF TRAFFIC.

INSTALL AND SPACE DRUMS NO GREATER THAN TWICE THE POSTED SPEED LIMIT (MPH) TO CLOSE OR KEEP THE SECTION OF THE ROADWAY CLOSED UNTIL THE TEMPORARY BARRIER CAN BE PLACED OR AFTER THE TEMPORARY BARRIER IS REMOVED.

N) PROTECT THE APPROACH END OF MOVABLE/PORTABLE CONCRETE BARRIER AT ALL TIMES DURING THE INSTALLATION AND REMOVAL OF THE BARRIER BY EITHER A TRUCK MOUNTED ATTENUATOR (MAXIMUM 72 HOURS) OR A TEMPORARY CRASH CUSHION.

PROTECT THE APPROACH END OF MOVABLE/PORTABLE CONCRETE BARRIER FROM ONCOMING TRAFFIC AT ALL TIMES BY A TEMPORARY CRASH CUSHION UNLESS THE APPROACH END OF MOVABLE/PORTABLE CONCRETE BARRIER IS OFFSET FROM ONCOMING TRAFFIC AS FOLLOWS OR AS SHOWN IN THE PLANS: (SEE ALSO 1101.05)

POSTED SPEED LIMIT	MINIMUM OFFSET
40 OR LESS	15 FT
45 – 50	20 FT
55	25 FT
60 MPH or HIGHER	30 FT

TRAFFIC CONTROL DEVICES

O) WHEN LANE CLOSURES ARE NOT IN EFFECT SPACE CHANNELIZING DEVICES IN WORK AREAS NO GREATER IN FEET THAN TWICE THE POSTED SPEED LIMIT (MPH) EXCEPT, 10 FT ON-CENTER IN RADII, AND 3 FT OFF THE EDGE OF AN OPEN TRAVELWAY. REFER TO STANDARD SPECIFICATIONS FOR ROADS AND STRUCTURES SECTIONS 1130 (DRUMS), 1135 (CONES) AND 1180 (SKINNY DRUMS) FOR ADDITIONAL REQUIREMENTS.

P) PLACE TYPE III BARRICADES, WITH "ROAD CLOSED" SIGN R11-2 ATTACHED, OF SUFFICIENT LENGTH TO CLOSE ENTIRE ROADWAY.

PAVEMENT MARKINGS AND MARKERS

Q) INSTALL TEMPORARY PAVEMENT MARKINGS AND TEMPORARY PAVEMENT MARKERS ON INTERIM LAYERS OF PAVEMENT AS FOLLOWS:

ROAD NAME	MARKING	MARKER
I-40/US 70 AND RAMPS	TEMPORARY TAPE	NONE

R) TIE PROPOSED PAVEMENT MARKING LINES TO EXISTING PAVEMENT MARKING LINES.

S) REMOVE/REPLACE ANY CONFLICTING/DAMAGED PAVEMENT MARKINGS AND MARKERS BY THE END OF EACH DAY'S OPERATION.

Pay Item No.	Sec No.	Description	Quantity	Unit
4402000000-E	SP	HIGH VISIBILITY STATIONARY SIGNS	42	SF
4465000000-N	1160	TEMPORARY CRASH CUSHIONS	1	EA
4485000000-E	1170	PORTABLE CONCRETE BARRIER	300	LF

PROJECT NO. 18313.1011276.PR

BUNCOMBE COUNTY

STATION:

vhb
VHB Engineering NC, P.C. (C-3705)
940 Main Campus Drive, Suite 500
Raleigh, NC 27606

DRAWN BY : J. TOWNSEND DATE : 8/2026
CHECKED BY : K. FISCHER DATE : 8/2026
DESIGN ENGINEER OF RECORD: J. TOWNSEND DATE : 8/2026

NORTH CAROLINA PROFESSIONAL SEAL 031533 ENGINEER JOHN G. TOWNSEND

DocuSigned by: John Townsend 11/5/2026
0B2101C41D6F4AC...

DOCUMENT NOT CONSIDERED FINAL UNLESS ALL SIGNATURES COMPLETED

STATE OF NORTH CAROLINA
DEPARTMENT OF TRANSPORTATION
RALEIGH

REPAIRS FOR REINFORCED CONCRETE BOX CULVERT
BP-011-6000

REVISIONS						SHEET NO.
NO.	BY:	DATE:	NO.	BY:	DATE:	TC-1
1			3			TOTAL SHEETS
2			4			10